GRAM BAKER GA 950 / GA 550

User manual

Gram Commercial A/S
Aage Grams Vej 1
6500 Vojens
+45 73 20 12 00
www.gram-commercial.com

Contents

Application 5
Safety information 6
Location 7
Placement of multiple units next to each other 9
General description 10
Electrical connection 11
Humidifier 12
Water drain 12
Water connection 13
General use 14
Commissioning, functional description 15
Connection and disconnection of the main circuit breaker 16
User interface to the unit (touchscreen) 17
Settings for the unit: date, time and language 17
Selection of language 18
Setting of clock (time) 19
Setting the date 19
Setting of date format 20
Season: summer time/winter time 20
Temperature measurement, units of Celsius or Fahrenheit. 20
Setting of ending times for programs for each weekday 21
Preconfigured programs 22
Selection and start of a program 22
Selection of ending time for the program 23
Changing of established date and ending time for the program 24
Changing of further settings before program start 25
Display during program execution (fig. 32) 27
Changing a running program 28
Interruption of the currently running program 29
Storage of user-defined (own) programs 29
Manual programs 33
Deletion of a specially created program 33
Alarms/error messages 34
Temperature alarms 34
Sensor alarms 35
Vapour system alarms 35
Other alarms 35
Door closing mechanism 36

Power failure 36
Cleaning 36
Door gaskets 37
Long term storage 37
Service 38
Disposal 39
EC-Declaration of conformity 40
Wiring diagram 41
Piping diagram 42

ENGLISH

Thank you for choosing a quality product from Gram Commercial.

This manual will advise you how to install, use and maintain your new product.

Before our products leave the factory, they undergo a full function and quality test. Should you nevertheless experience problems with the product, then contact your local dealer.

Gram Commercial subsidiaries and dealers placed all over the world are ready to help you.

Gram Commercial supplies warranty on all products.
This warranty is subject to correct use according to specifications, where e.g. common maintenance and eventual repairs are carried out by Gram Commercial techicians or technicians approved by Gram Commercial.

Changes in installation and other use of the procuct than prescribed in this manual, might affect the operation and durability of the product.

The manual is written according to our current technical knowledge. We constantly work on updating this information, and we reserve the right to make technical changes.

Application

This product is designed for storage of foodstuff at a constant temperature. The product may not be used for chilling or freezing of foodstuff.

The product is only to be used for the purpose for which it has been expressly designed (storage of cooled or frozen items). Any other use could cause that the products stored in the product are not kept at the right temperature.

The manufacturer will not be held liable or responsible for any damage caused by improper, incorrect or unreasonable use.

Safety information

Important

Description of symbols used in this manual.

Warning Lacking observation to these instrucions might result in accidents with personal injury.

Important If these instructions are not observed, the product might be damaged or destroyed.

Be aware that Gram Commercial has taken precautions to ensure that the safety of the product is in order.

Please read carefully the following information regarding safety.

It is important, that everyone who are to use or install the product, to have access to this manual.

This appliance is not intended for use by persons with reduced physical, sensory or mental capabilities, or lack of experience and knowledge, unless they have been given supervison or instruction concerning use of the appliance by a person responsible for their safety.

Children should be supervised to ensure that they do not play with the appliance.

The appliance might contain parts with sharp edges in the compressor compartment, and in the inside compartment.

The appliance is not to be transported on a sack truck, there is a danger of loosing the balance, causing danger to persons.

Do not pull the power cord to dicconnect the appliance, or when moving the appliance.

Location

When receiving the product, check the packaging material for damage.

If any damage occurs at the packaging material, it should be considered if the product might have been damaged too. If the damage is substantial, please contact your dealer.

The transport pallet can be removed by loosening the screws that fasten the pallet to the product.

⚠ This task requires at least 2 persons.The heaviest part of the product is at the top. Be aware of this, when removing the transport pallet.

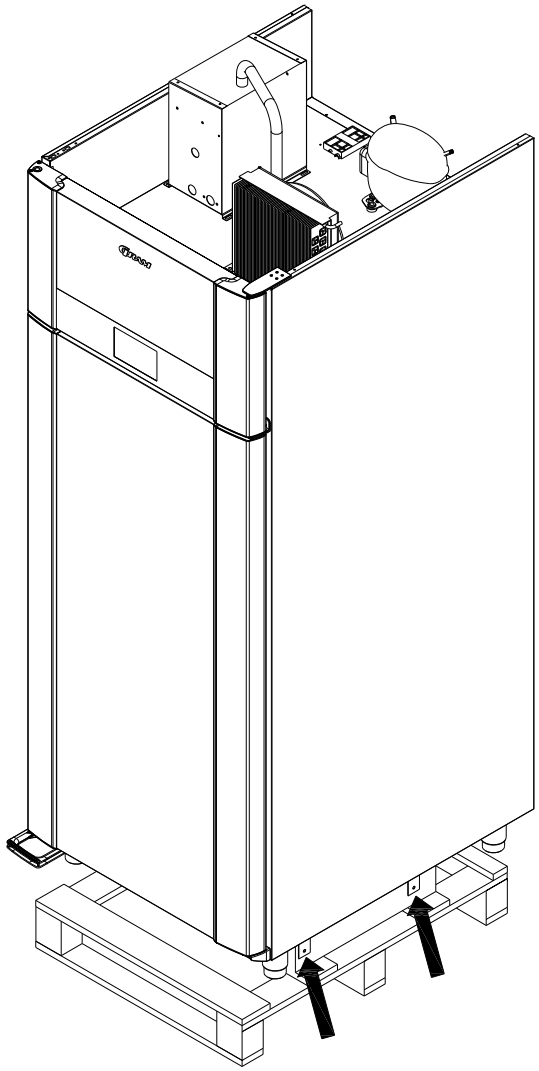

If the cabinet has been transported in horizontal position it must stand upright at least 2 hours before it is started to allow the oil from the compressor to run back.

- Because of the heavy weight of the product, the floor might be damaged or scratched when moving the product.
- Correct set up gives the most effective operation.
- The product should be located in a dry and adequately ventilated room.
- To ensure efficient operation, it may not be placed in direct sunlight or against heat-emitting surfaces. The product is designed to operate in an ambient temperature between +16°C and +40°C.
- Avoid placement of the product in a chlorine/acid-containing environment (swimming bath etc.) due to risk of corrosion.
- The product and parts of the interior is equipped with a protecting film, which should be removed before use.
- Clean the product with a mild soap solution before use.

The set up place must be level and horizontal.

For versions with legs, use the adjustable legs to make sure that the product stands level and upright.

For versions with castors, the locking devices of the two front castors must be activated, when the product is in place. The base must be level, and the product may not be placed on frames or the like.

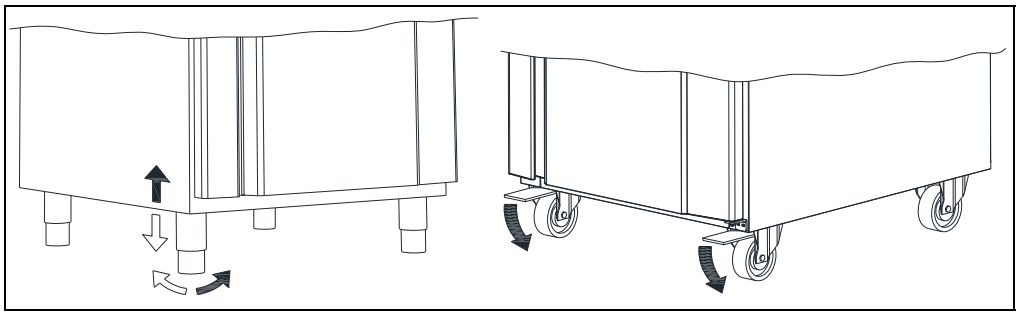

Fig. 2

Placement of multiple units next to each other

Depending upon the temperature and humidity at the installation location as well as the correct values being set, water contained in the surrounding air may condense on the surface of a refrigerator (condensation formation) due to the design.

If multiple refrigerators or freezers are placed next to each other, then this condensation effect is stronger, plus a smaller amount of air would then circulate between the units. Hence, the minimum distance between the units must be **40 mm**.

This space must not be closed off at its top or bottom, however due to aesthetical considerations it may be covered in the front by, for example, a stainless steel panel. In order to be able to clean this space, the panel must be detachable.

If it is not possible to establish free air circulation at the bottom via, for example, installation on a pedestal, then the space must not be fully sealed at the front.

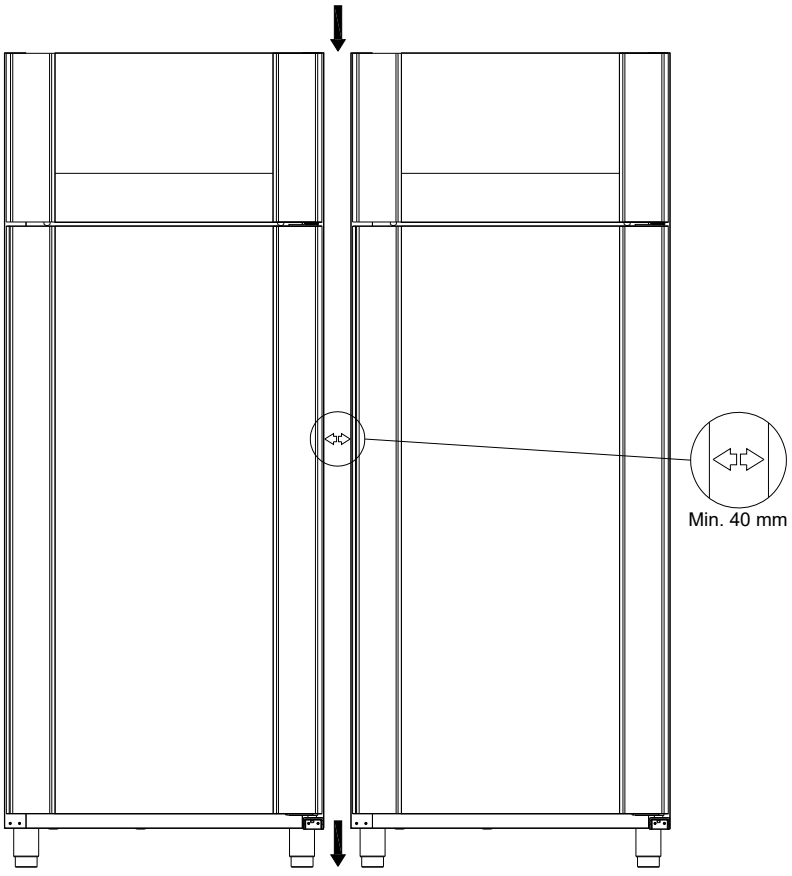

General description

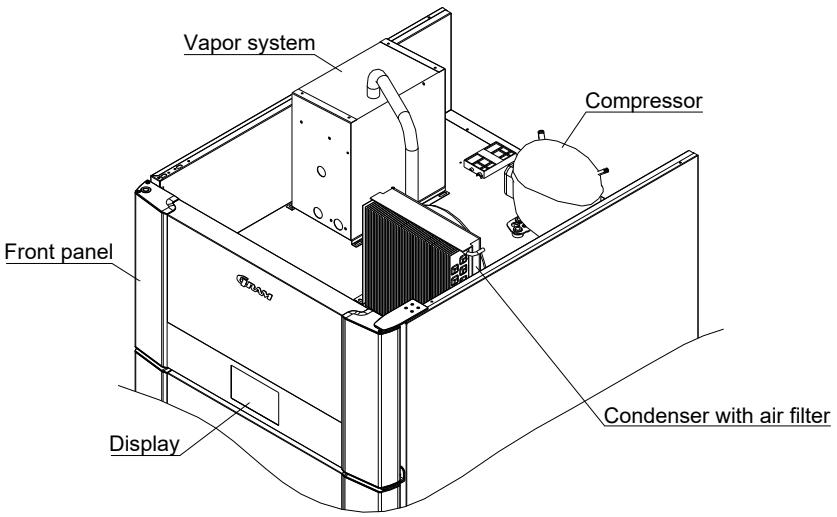

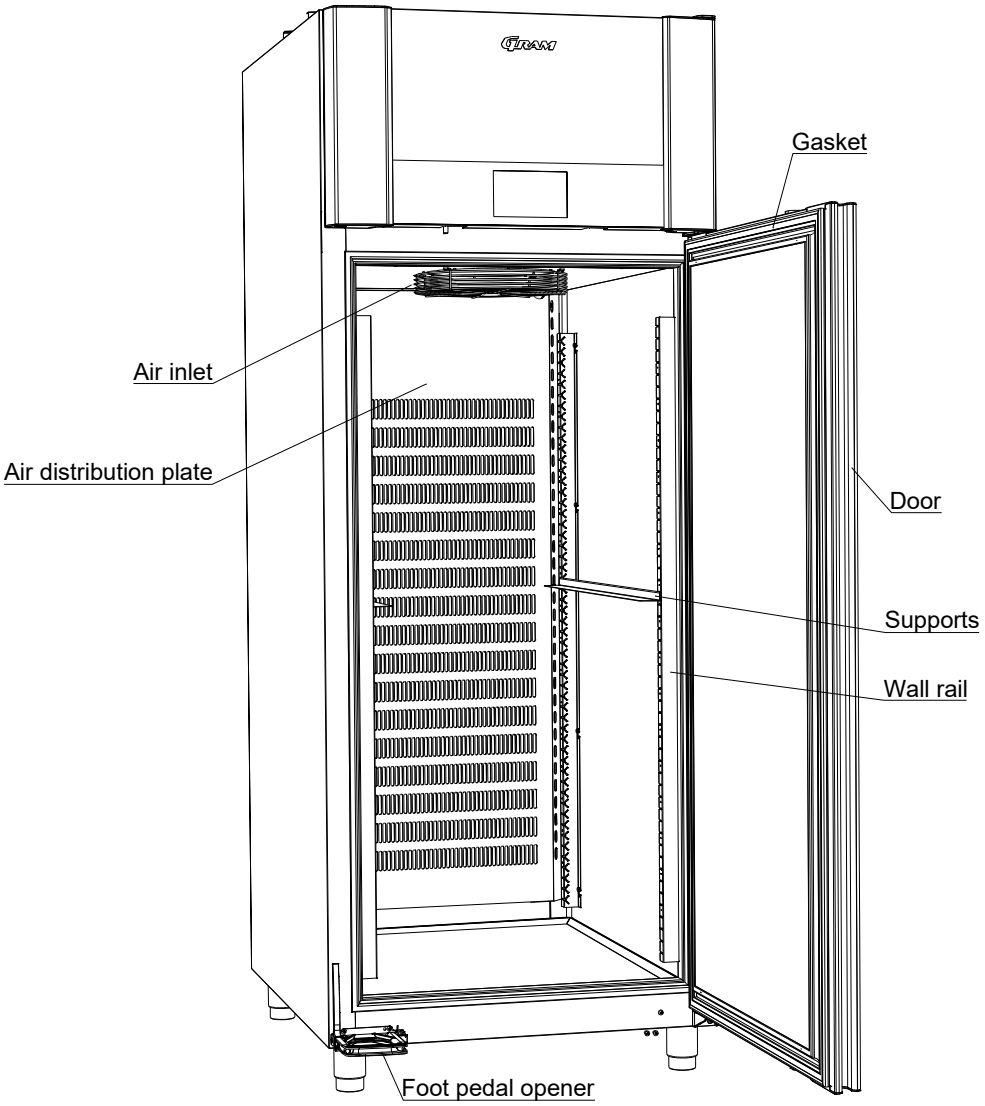

Electrical connection

Read the text below thoroughly before electrical connection.

The product is intended for connection to alternating current. The connection voltage (V) and frequency (Hz) are shown on the name plate in the cabinet. Only the supplied cord is to be used.

Never use an extension cord for this appliance!
If a wall socket is placed in a longer distance than the length of the supplied power cord, contact an electrician to establish a wall socket within the range of the supplied power cord.

If the product is defective, it must be examined by a service electrician advised by Gram Commercial during the guarantee period, if it is a product with built-in compressor.
If it is a product connected to an external compressor unit, it must be examined by the company who has connected the product to the unit.
Outside the guarantee period, it is advisable to use the service advised by Gram Commercial, if possible. If this is not the case, assistance is required from a refrigeration company with knowledge of Gram's products.

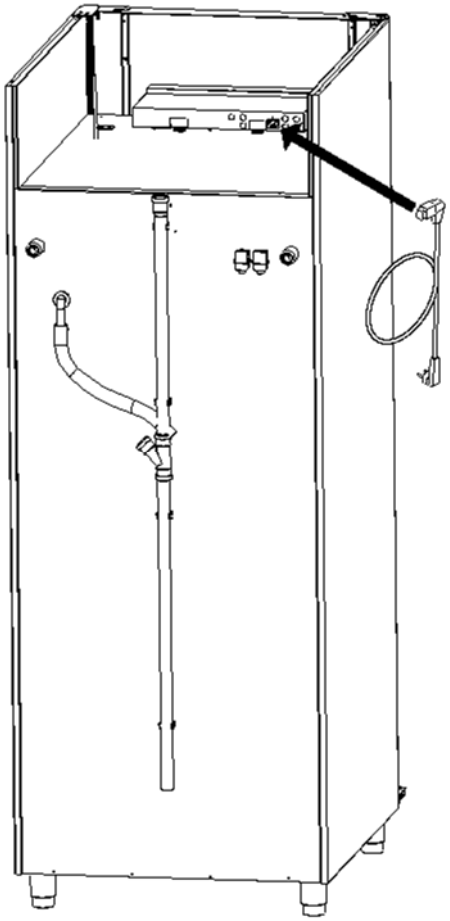

Always disconnect the power if interruptions in power supply occur, and when electrical parts are removed/put on, and before cleaning and maintenance of the product.

Repairing of electrical/technical parts may only be performed by a service electrician from Gram Commercial or an authorised refrigeration company with knowledge of Gram's products.

Do not use the product before all coverings are installed, so that live or rotating machine parts can not be touched.

The product is not to be used outdoor.

All earthing requirements stipulated by the local electricity authorities must be observed. The plug and wall socket should then give correct earthing. If necessary, contact an electrician.

⚠ Make sure the product is switched off at the socket before service is performed on electrical parts. It is not sufficient to switch off the product by the START/STOP key as there will still be voltage to some electrical parts of the product.

Humidifier

The cabinet is equipped with a humidifier that provides steam during proving. The humidifier consists of a water tank heated by electrodes. From the tank, steam is led into the cabinet through a pipe. The tank is automatically filled from the water supply.
The tank can be flushed by switching the cabinet off at the main switch and then switching it on again. In addition, the system is automatically flushed regularly depending on water quality.

⚠ For further information on servicing and maintaining the humidifier, please consult the "Service and operation manual". For maintenance of the humidifier, request service assistance.

Water drain

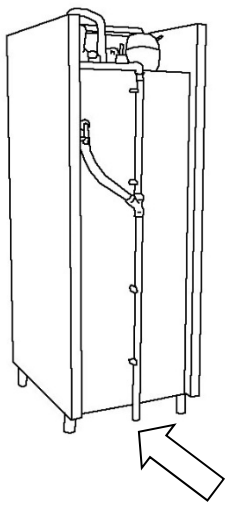

Defrost water and water flushed from the humidifier are led away through a pipe on the rear of the cabinet. A water seal must be installed between cabinet and drain.

Water connection

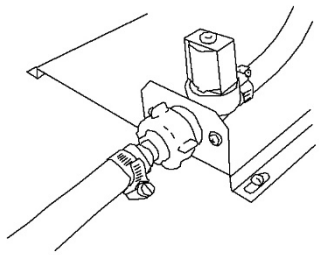

To provide proper steam production, the humidifier must be connected to a water supply. To assure ideal steam production, it is important that the electrical conductivity of the inlet water is measured by the installer, to assure it is within standard range. See Below Box!

Please note the following:

The electrical conductivity of the water must be in the range: 200-800 µS/cm.*

The temperature of the inlet water must not exceed 40°C.

The water pressure must be in the range 1-10 bar.

A shut-off valve, a check valve, and a filter if necessary, must be fitted to the supply pipe.

*If the electrical conductivity of the water is outside the above mentioned standard range (200 – 800 µS/cm) some controller settings, might need adjustment in order to maintain proper steam production. These adjustments must be done by a service technician, and are described in the service manual.

Indications that water conductivity is outside of standard range are:

- Too poor steam production
- Frequently having boiler overfilled alarm

General use

Do not block vent holes in the front panel.

Do not damage the refrigeration system parts.

During normal operation, some parts of the refrigeration system in the compressor compartment might reach high temperatures, and could therefore cause burns if touching these components.

Do not use electrical devices inside the product.

To ensure correct and efficient air flow in the cabinet, the shaded areas must be kept free of items.

All items to be stored, that are not wrapped or packed, must be covered in order to avoid unnecessary corrosion of the inner parts of the cabinet.

If any controller parameters are changed from default, this could cause that the product is not functioning normally, and harmful temperatures could damage items that are kept inside the product.

If the product is turned off, wait minimum 3 minutes before turning it on again. This is to protect the compressor from damage

Maximum loading of wire shelf: 40 kg

Do not store explosive substances such as aerosol cans with flammable propellant in this appliance.

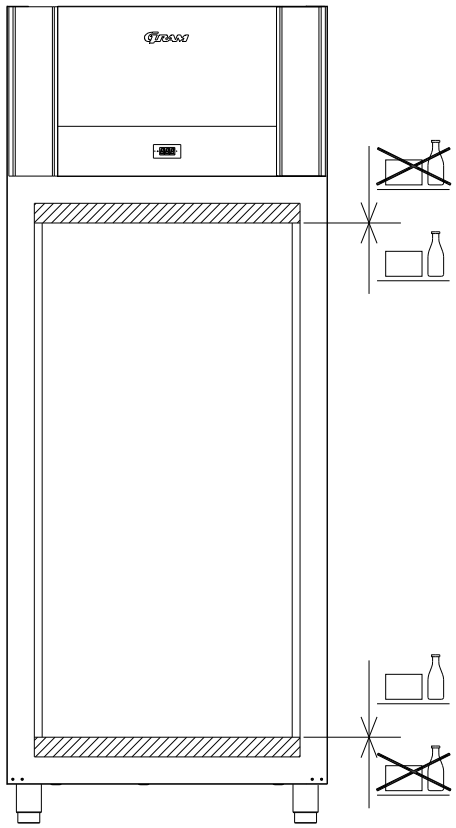

Commissioning, functional description

In order to ensure reliable processes for Freezing, Storage, Thawing, Proving and Holding the cabinet must be furnished with controls to regulate the air temperature, ventilation and relative humidity.

The operating modes of Storage, Thawing, Proving and Holding can be connected up manually.

This means that the unit can also be used as a normal refrigerator or freezer in a storage program with a constant temperature. With the thawing and proving operating modes, the relative humidity is instead kept constant while the temperature varies.

Correct programming of the controls establishes the desired combination of the operating modes:

- time-controlled freezing with subsequent storage for an arbitrary length of time
- time-controlled freezing with subsequent storage and time-controlled thawing as well as subsequent maintenance of the climate upon conclusion of the thawing program
- complete program with freezing, storage, thawing and proving until being taken out or holding when the roux time is exceeded.

Connection and disconnection of the main circuit breaker

The unit is furnished with a two-pole main breaker, which is located behind the tiltable control panel. When it has been disconnected, the controls and all components that are accessible without opening the control panel are disconnected from the power supply. If the main breaker is connected, then the controls and the other components are connected to the power supply.

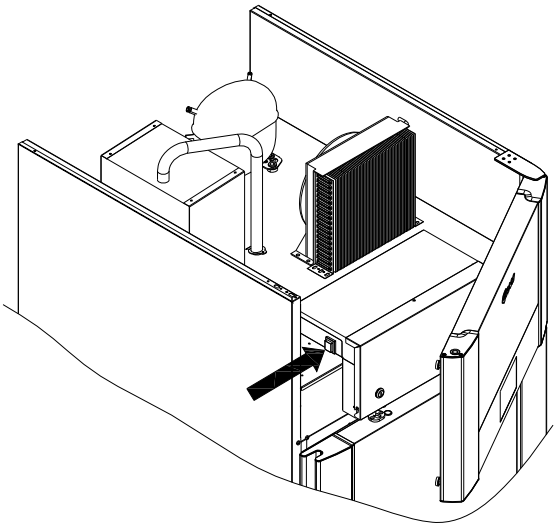

Warning

When working on the electrical equipment, the unit must always have its power from the grid shut off by disconnecting it and then pulling the plug out of the power socket. It is **NOT** sufficient to disconnect the unit with the ON/OFF button because certain parts of the unit will still have an applied voltage.

User interface to the unit (touchscreen)

All operating functions are performed by touching the respective buttons displayed on the touchscreen, for example changing values and starting and stopping programs. In connection with this, the function is "touch and release", which in other words is that the controls react to being touched once you let go of the keyboard.
When the unit is connected with the lighting mains, and the main breaker switched on, then the standby display is shown on the screen: (fig. 1). The Gram logo and the unit type "GA 950" as well as the date and time are shown on a field with a blue background. Please check that the correct date and time are displayed.

Fig. 1

If the date, time or selected language are not displayed correctly (date format), go to the section entitled "Settings for the unit: date, time and language" (see below) in order to change the settings.
When the display is touched, the controls change from standby to the first on-screen menu (fig. 2):

Fig. 2

This menu is the **start menu** for all further functionality. If the unit is in the process of running an active program, and you do not touch the screen for 30 minutes, then the controls will switch back to the standby display (fig. 1)

Settings for the unit: date, time and language

,Q RUGHU WR FKDQJH WKH GDWH WLPHVRRU PHQX OXDQJXD

WR SUHVV WKH EXWWRQ UG RQ FKKQHNV ZHURO LJKWWFKRU QR
VFUHHQ ILJ 7KHLQJ WRU \WKH OKQJXDJH LV (QJOLV

:KHQ \RX SUHVV WKH EXWXRQ VHWWLQJVQIRUILJKH XQLW

) L J

7R VHW WKH GDWH WLPHVRU WKH EXWWRQ JV PHQX WKHQ
ZLWK WKH DVVRFLDWHG ILHOGV ILJ

6HOHFWLRQ RI ODQJXDJH

) L J

:KHQ \RX WRXFK WKH ILHOGRV QWPHQXV KHUHSRVHQHG DQG
GLVSOD\HG)LJ ODQJXDJH WKH OHFWLRQJX 7KHFGQVEHVGHO
WRXFKLQJ LW

,W LV LPSRUWDQW WRO VHWR DQW WKH KDQWEHKLQ SKDIRUP
DUHDV

Setting of date format

Set the date format by pressing the "DD/MM/YYYY" field (fig. 11).

Fig. 11 Fig. 12

The choice between the sequence day/month/year and month/day/year is now shown (fig. 12): Select by pressing.

Season: summer time/winter time

Setting of the season, i.e. the setting of winter/summer time is done by pressing on the field under the text "Summer time" (fig. 13):

Fig. 13 Fig. 14

Possible choices:

"NO" = manual selection of winter time (system time)

"YES" = manual selection of summer time (system time + 1 hour)

"AUTO" = automatic switching to Central European Summer Time, CEST:
Start on summer time: last Sunday in March
End of summer time: last Sunday in October

The factory setting is "AUTO". Select by pressing.

Temperature measurement, units of Celsius or Fahrenheit.

Setting the unit to display temperatures in Celsius or Fahrenheit is done by pressing the field under "Units" (fig. 15):

Fig. 15

Fig. 16

Here, you can choose to display temperatures in Celsius or Fahrenheit for all displays in the controls (fig. 16).

When you have made all the changes to the settings, then return to the Settings menu (fig. 4) for the unit by pressing the "OK" button (fig. 16).

Fig. 17

Fig. 2

Return to the start menu (fig. 2) by pressing the field (arrow back) in the lower right corner (fig. 17).

Setting of ending times for programs for each weekday

In order to take weekends and holidays into consideration, an ending point in time can be established for programs for each weekday as a default. This is then shown upon later program selection, and you only need to confirm it by choosing "morning".

Press the button in the keyboard (machine symbol) in the start menu (fig. 3, page 16). The menu for settings for the unit now opens (fig. 18).

Fig. 18

Fig. 19

Press on the "Calendar page" (fig. 18) in order to open the ending time menu for the program (fig. 19). When you press on the white fields with the times for the day, a settings menu opens, where you can enter the time (fig. 20).

Fig. 20

Fig. 20a

Enter a time. In order to jump over a day, the symbol „---„ (fig. 20a) needs to be inserted on the desired day. With "OK", you save what you entered for this weekday, or you can return to the weekly overview (fig. 19) without saving.

Once all the changes have been made, you return to the start menu by pressing twice, (fig. 20a).

Preconfigured programs

There are five preconfigured programs stored in the controls, which can be selected directly in the start menu under the overview (fig. 21). These programs cannot be deleted or overwritten.

Fig. 21

Selection and start of a program

In order to start a preconfigured program without changing the settings, you press on the button on the keyboard with the symbol Master. The selected symbol is shown with a blue edge, and the "Settings" button (symbol for the sliding button) is shown in blue, which means that it has been activated (fig. 22).

Fig. 22

Further touching of the Master symbol opens a window with an ending time for the program (ready at) on the following day.

Selection of ending time for the program

A menu is opened in which the ending time for the program is selected, and the default - setting of "Weekday" must be confirmed (fig. 23).

The usual ending time for programs can be established in the menu Settings for the unit as a default value for each weekday (see the section entitled "Default ending times for programs for each weekday", page 21).

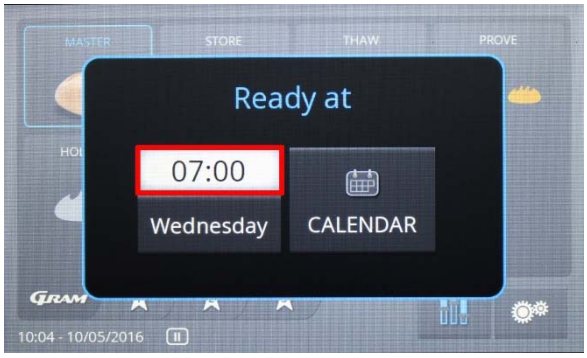

If the ending time established for the program is correct, then the program can be started by choosing "Weekday" (Monday, Tuesday, etc.). The program only starts if there is sufficient time remaining between the time for the starting and ending times for the program for the sum of the programmed program sections (phases). Otherwise, the earliest possible ending time for the program is shown (fig. 23).

To switch out of the display, press on "Ready at".

Changing of established date and ending time for the program

To do this, press on the "Calendar" field (fig. 26)

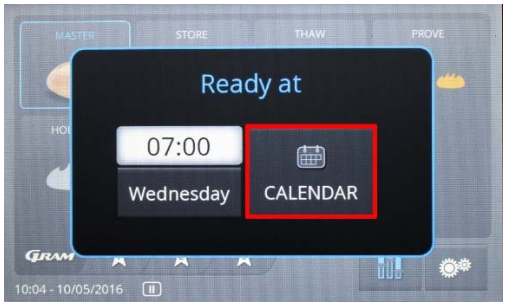

Fig. 26

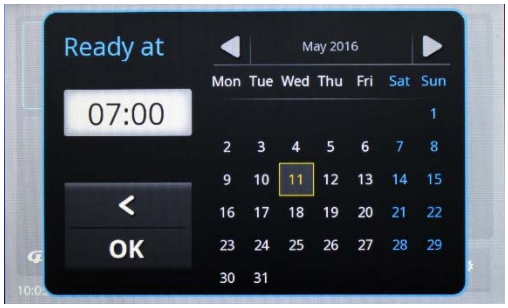

Fig. 27

Fig. 20

The calendar menu (fig. 27) will be displayed. Here, the date can be changed by touching the date fields. Selections for changing the time can be opened by touching the time window. Here, the time can be entered and then saved with "OK". By selecting you exit the menu without making any changes. With "OK" you exit the menu and start execution of the program.

Changing of further settings before program start

In order to adjust a preconfigured program, touch the button on the keyboard with the Master symbol. The selected symbol is displayed with a blue edge, and the "Settings" button (symbol with sliding button) is shown in blue, which means that it has been activated (fig. 28).
Touching the "Settings" button (symbol with sliding button) displays the settings menu with five program phases: Freezing, Storage, Thawing, Proving, Holding (fig. 29).

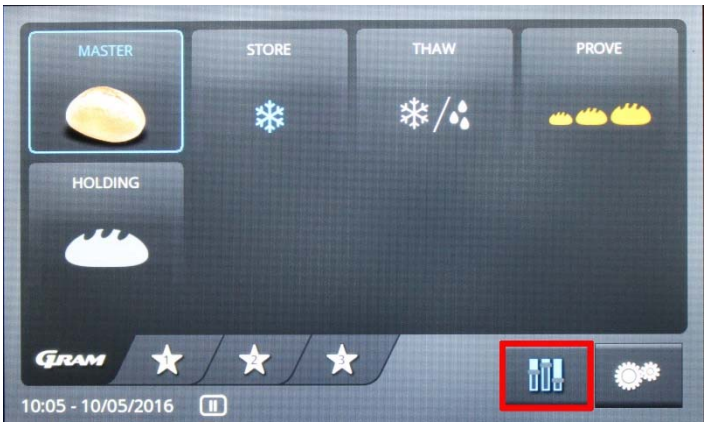

Fig. 28

Fields are shown below that contain the values for duration, temperature and relative humidity for the respective program phase. By touching the field for the respective program phase, for example , you select it to have its values set. The fields are then opened, for example , by touching them (white fields). The data entry menu is shown, for example time, "Duration" (fig. 30).

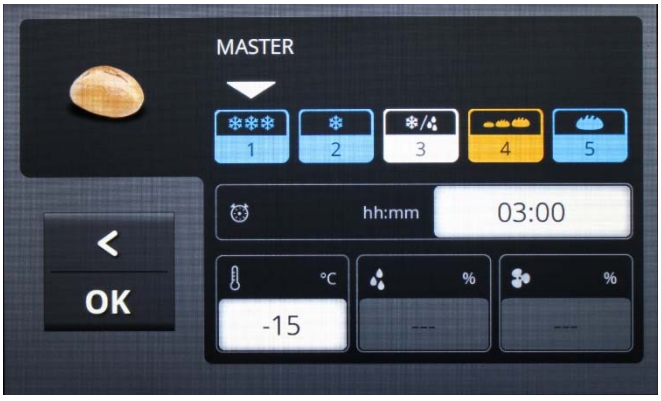

Fig. 29

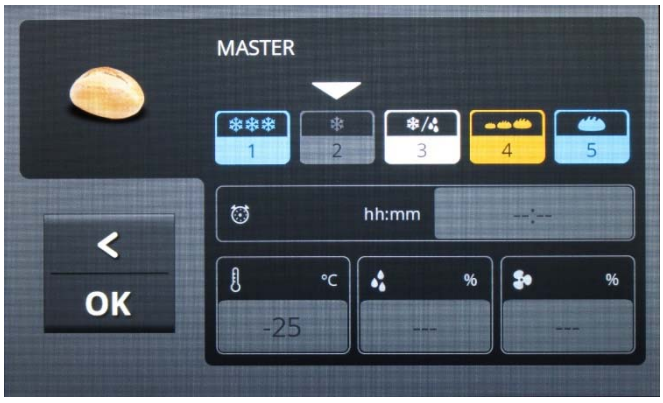

Fig. 30

In order to deactivate a program phase, the symbol must be selected, after which you press on it until the field "GREY" has been saved. In order to reactivate the program phase, you must press on it again, until the symbol has its original colour. If goods are placed in the unit that have been refrigerated in advance, and the program is started with storage, then under

you must choose selection, see the first section. For example, to disconnect holding you must make the same selection under .
With "OK" the values are accepted and the menu closed. The selection menu "Save recipe ?" is then shown (fig. 31)

Saves the entered values temporarily and accordingly runs the execution of the program activated below only once.

Enables storage of the changes in a special user-defined program (see the section "User-defined programs", page 27).

Fig. 31

Means that the menu will be exited without changes, i.e. the changes will be rejected.

Display during program execution (fig. 32)

The top line shows the phase of the program execution currently running depending upon the program selected:

Freezing, Storage, Thawing, Proving, Holding

The field in the upper right rectangle shows the currently running program phase and the associated remaining (residual) time.

A red triangle is shown as an alarm symbol in the event of an alarm.

The green bar at the bottom of the display shows the total program execution in proportion to the duration.

In the window in the middle, the symbol for the currently

running program is shown at the left, in the centre the ending time for the program and at the right a button to interrupt the program.

The current value for the temperature or the relative humidity is shown in the lower right corner depending upon the program phase.

Changing a running program

Fig. 33

Fig. 34

Touching the program symbol (fig. 33) opens the settings menu (fig. 34), where you can change the specifications for program phases that have not been run yet.
Touching the field with the ending time for the program (fig. 35) opens the settings menus for date and time (fig. 36) for purposes of changing the ending time for the program, see the above for the descriptive section "Changing the ending time for the program" (page 22) / "Changing the date of the ending time for the program" (page 23).

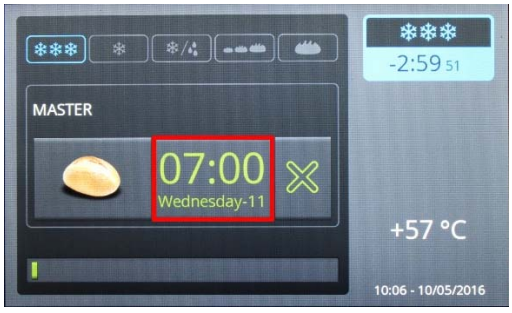

Fig. 35

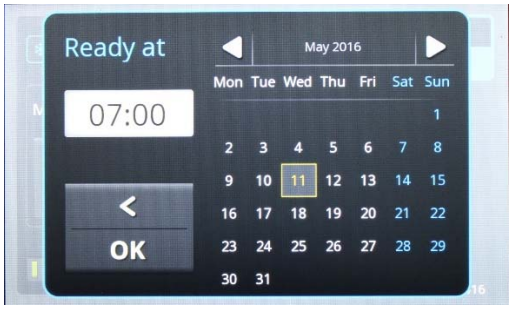

Fig. 36

Fig. 20

Here, the date can be changed by touching the date fields. Selection of the time can be opened by touching the time window, fig. 20. Here, the time can be entered and saved with "OK". Exit the menu without making changes with "<".

The ending time for the program may only be changed before the start of the thawing phase!

Interruption of the currently running program

Touching the button causes the currently running program to be interrupted (fig. 36).

Fig. 36

Fig. 37

A window opens where for verification purposes you are asked whether the program should really be halted (fig. 37). If

("YES") is selected, the program is stopped. If

("Back") is selected then interruption of the program is interrupted, i.e. you return to the currently running program without any action being taken.

Storage of user-defined (own) programs

In order to change a predefined program and save it as your own program, touch the button on the keyboard with the symbol (here, for example, Master). The selected symbol is displayed with a blue edge, and the "Settings" button (symbol with sliding button) is shown in blue, which means that it has been activated (fig. 38). Touching the "Settings" button (symbol with sliding button) displays the settings menu with the five program phases (fig. 39).

Fig. 38

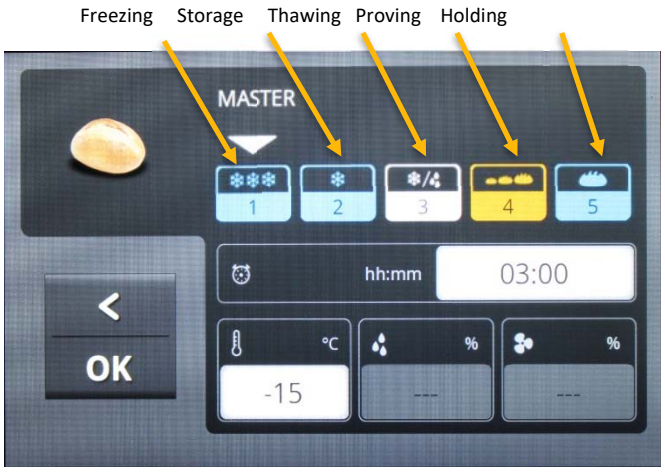

Fig. 39

Under these, there are fields containing the values for duration, temperature and relative humidity for the respective program phase. By touching the field for the respective program phase, for example, it is selected for the setting of its values. Then the fields, for example , are opened when touched. The value entered for a value, for example the length of time "Duration", is shown (fig. 40).

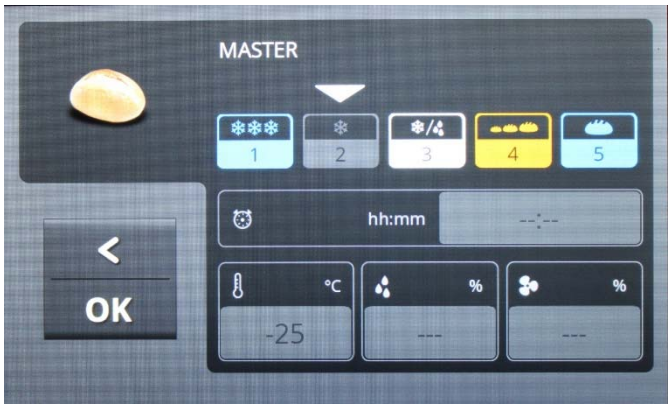

Fig. 40

In order to deactivate a program phase, the symbol must be selected, after which you press on it until the "GREY" field has been saved. To reactivate the program phase, you must press on it again until the symbol has its original colour. If goods are placed in the unit that have been refrigerated in advance, and the program is started with storage, then under you must choose selection, see the first section. For example, to disconnect holding, you have to make the same selection under .

With "OK" the values are accepted and the menu closed. The selection menu "Save recipe ?" is then shown (fig. 41)

EXECUTE Saves the entered values temporarily and runs in a corresponding manner the commenced program sequence 1 x.

SAVE Means that the menu is exited without changes.

Fig. 41

With CANCEL the settings made are saved in a special user-defined program. The storage menu is displayed.

Fig. 42 Fig. 43

When touching the field with the program name (fig. 42), a window with an alphanumeric keyboard is displayed for entry of a special program name (fig. 43). Enter a name for the program, and press "OK", or exit the window without changes with .

The storage menu is then displayed again.

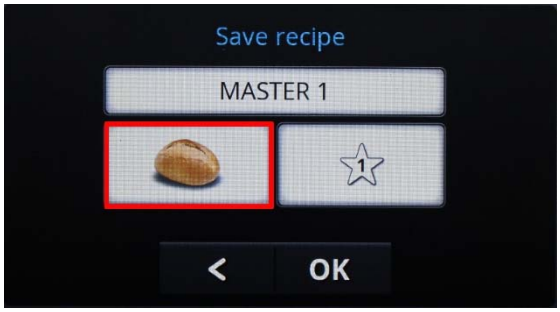

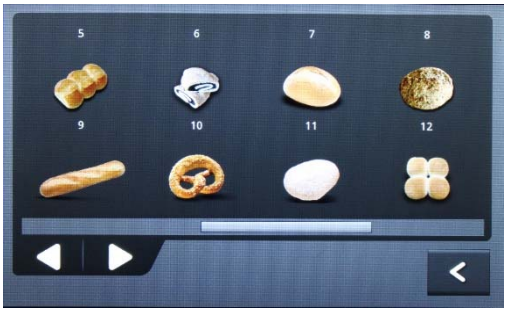

Fig. 43 Fig. 44

Touching the program symbol (fig. 43) shows a selection of symbols for your own programs (fig. 44). Choose a symbol by touching it, and navigate back and forth between further symbols with "<" or ">". Change for example the picture from to or exit the menu without changes with "<".

The storage menus will be displayed.

Fig. 45

Fig. 46

Touching the field selects the memory location in one of the folders in the start menu.

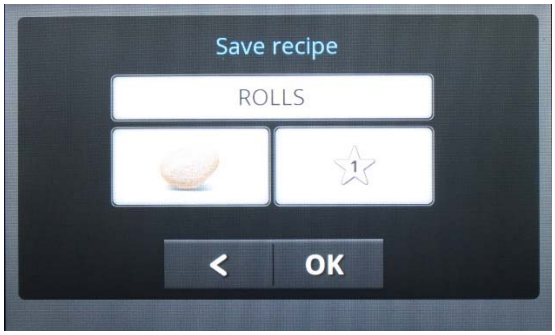

Fig. 47

Select a folder, or exit the menu without changes with "<".

Bear in mind that the preconfigured programs themselves in the folder GRAM cannot be overwritten.

When all settings have been adjusted, you can save your program with "OK".

Manual programs

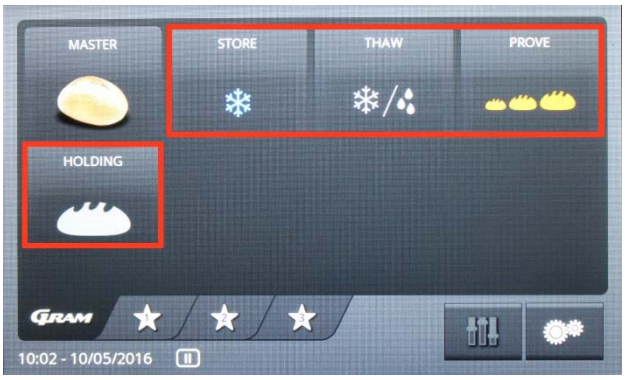

The display start page (fig. 48) will save up to four different symbols. You can activate each one of these program phases separately to for example use the unit as a storage freezer or solely as a proving machine.

Fig. 48

Procedure at the start of the phases:

Select the desired program, and press once, until a blue frame is displayed.

Then press the symbol at the bottom to the right, and set the settings accordingly (white fields).

Exit the menu with the symbol OK. For further steps in connection with execution, storage and interruption, please see page 29.

Exit the menu without saving with the button "<".

Deletion of a specially created program

Select program, blue frame is displayed, after which you continue to press until a new menu item is displayed, (fig. 49).

Fig. 49

You can now select "YES" or "NO" for deletion. The program is deleted by selecting "YES", whereas it continues to be available by selecting "NO".

Alarms/error messages

If an error arises, an error message window is displayed on the screen, for example a room sensor error, and an acoustic alarm is issued.

In order to acknowledge this alarm, you must touch the alarm window (the area with the black background).

Then a red triangle is shown on the display for the currently executing program until the error is remedied.
Depending upon the priority of the error, the program will continue with an emergency program, or it will be interrupted.

Temperature alarms

Error message	Description	System reaction
Alarm high temperature	The temperature around the room sensor has been above the alarm value for longer than the alarm delay time	none
Alarm low temperature	The temperature around the room sensor has been below the alarm value for longer than the alarm delay time	none
Condenser temperature high	The temperature around the evaporator sensor has been above the alarm value for longer than the alarm delay time	none
Too many consecutive evaporator temperature alarms	The evaporator temperature alarm is occurring more frequently than the setting for repetition counts	The compressor is disconnected, and the evaporator fan runs with 100% power.

Sensor alarms

Error message	Description	System reaction
Room sensor error	Sensor defective, not connected or short-circuited.	Compressor runs for 5 min. ON and 5 min. OFF.
Evaporator sensor error	Sensor defective, not connected or short-circuited.	Defrosting will be 45 min., and the evaporator fan will start 10 min. after the defrosting.
Condenser sensor error	Sensor defective, not connected or short-circuited	None
RF sensor error	Sensor defective, not connected or short-circuited	Vapour system will be shut off until the error has been remedied

Vapour system alarms

Error message	Description	System reaction
Boiler overfilled – summon service	Too much water in boiler, defective water valve.	Vapour system will be shut off until the error has been remedied.
Water connection error	No water connection to boiler, no power to water valve.	No steam production
Test water connection	No water connection to boiler, no power to water valve.	No steam production
Boiler discharge error	Defective water valve.	Vapour system will be shut off until the error has been remedied.
Boiler overfilled	Defective water valve	Vapour system will be shut off until the error has been remedied.

Other alarms

Error message	Description	System reaction
Door open	Door open longer than 45 min. or defective door contact.	Compressor disconnected until the error has been remedied.
Power connection error	Loss of power for more than 5 min.	Program is shut down when the power comes back on again.

Door closing mechanism

The door is equipped with a self-closing system. If the door is opened less than 90°, it will close by itself. If the door is opened more than 90°, it will stay open.

The door can be opened by using the foot pedal. This leaves both hands free when placing foodstuffs the cabinet.

Power failure

In the event of a power failure, the control remembers the temperature setting and restarts the product when power is restored. If the power failure persists for some time, the control might revert to the factory setting.

Cleaning

Insufficient cleaning will cause that the product will not work at optimum perfomance, or eventually it will be defective.

Before cleaning, the product should always be disconnected.

Do not flush the product with water, do not use water jet or steam hose as this may cause short-circuits in the electrical system.

Cleansing agents containing chlorine or compounds of chlorine as well as other corrosive means, **are not to be used**, as they might cause corrosion to the stainless panels of the cabinet and the evaporator.

The compressor compartment and in particular the condenser must be kept free from dust and dirt. This is best done by cleaning the compressor compartment and the condenser air filter with a vacuum cleaner, if dust/flour is the matter. The air filters on the condenser and the front panel can be removed and cleaned in hot water (at max. 50°C).

For the external maintenance – use stainless steel polish.

The product should be cleaned internally with a mild soap solution at suitable intervals and checked thoroughly before it is put into operation again.

Door gaskets

This chapter deals with the importance of a well-functioning door gasket.

Gaskets are an important part of a refrigerator/freezer. Gaskets with reduced functionality, reduces the tightness of the cabinet. Reduced tightness might cause increased humidity, internal icing, an iced up evaporator (leading to reduced refrigeration capacity), and in worst case reduced lifecycle of the cabinet.

Therefore it is important to be aware of the condition of the gasket. Regular inspection is recommended.

The gasket should be cleaned regularly with a mild soap solution.

If a gasket needs replacement, contact your supplier.

Long term storage

If the product is taken out of operation, and need to be prepared for long-term storage, clean the inside compartment, the door and door gasket thorougly with a hot soapy damp cloth.
Eventual remnants of food could create mould.

Service

The refrigerating system and the hermetically sealed compressor require no maintainance - they merely have to be kept clean.

If refrigeration fails, first investigate whether the unit has been unintentionally disconnected or switched off at the socket, or whether a fuse has blown.

If it is not possible to find the cause of the refrigeration failure, please contact Gram service department.

When contacting us please tell us the name and serial number (S/N) / (WWYY) of the cabinet. This information is stated on the name plate.

Location of the name plate:

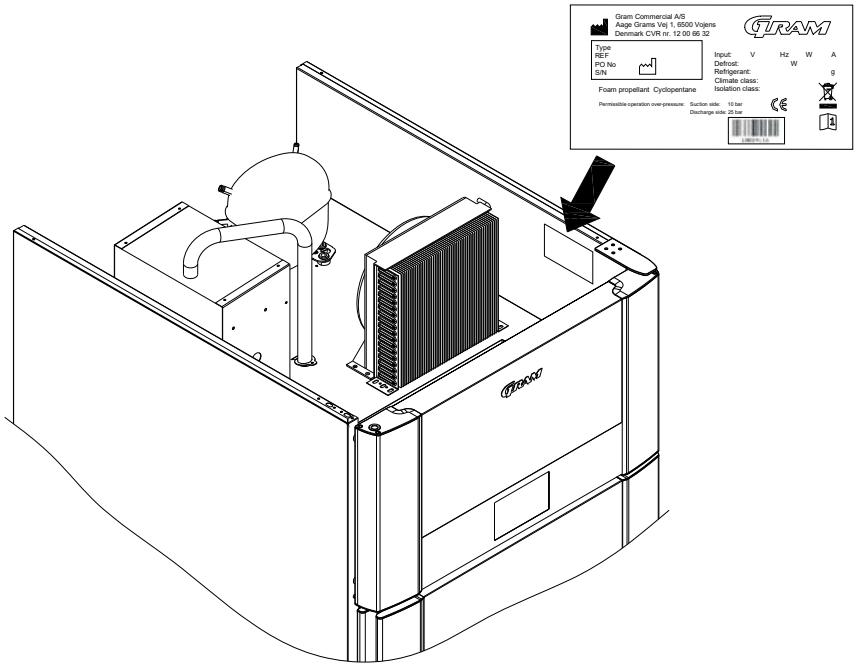

Disposal

The below only concerns the United Kingdom.

Disposal of an old cabinet is only available when we are delivering a new one at the same time. Cabinets must be fully defrosted and emptied prior to collection.

Gram recognises that our products for the catering market are considered as WEEE when they become obsolete. To ensure that Gram's responsibilities are handled correctly and environmentally friendly, we are signed up the largest Business to Business compliance scheme in the UK – B2B Compliance
http://www.b2bcompliance.org.uk

B2B Compliance will on our behalf deal with all areas of our responsibilities when collecting and disposing of equipment which fall under the UK WEEE regulations.
B2B Compliance can be contacted on telephone number 01691 676124.

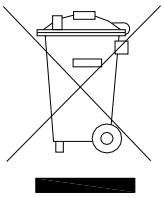

EC-Declaration of conformity

Producer	Name:	Gram Commercial A/S
	Adress:	Aage Grams Vej 1, 6500 Vojens
	Tel.:	+45 73 20 12 00
Product	Model:	Baker GA 950, Baker GA 550
	Refrigerant:	R134a, R404A, R290
	Year:	2016

Directives

The product is in compliance with all the essential health- and safety requirements and provisons in:

Directive for Machinery 2006/42/EF

The product is where relevant in compliance with the following other directives:

Regulation 2015/1095

FCM regulation 10/2011

Regulation 1935/2004

RoHS - 2011/65/EU

Standards

The following standards are used to the extent necessary to comply with the relevant directives:

DS/EN 12100:2011 - Safety of machinery -- General principles for design -- Risk assessment and risk reduction

DS/EN 60335-1:2012 – Household and similar electrical appliances. Safety. General requirements

DS/EN 60335-2-89:2010 – Household and similar electrical appliances. Safety. Particular requirements for commercial refrigerating appliances with an incorporated or remote refrigerant condensing unit or compressor

Person responsible for technical dossier	Company:	Gram Commercial A/S
	Adress:	Aage Grams Vej 1
	Name:	John Lund

Signature Vojens 18/11-2016 R&D Manager

Wiring diagram

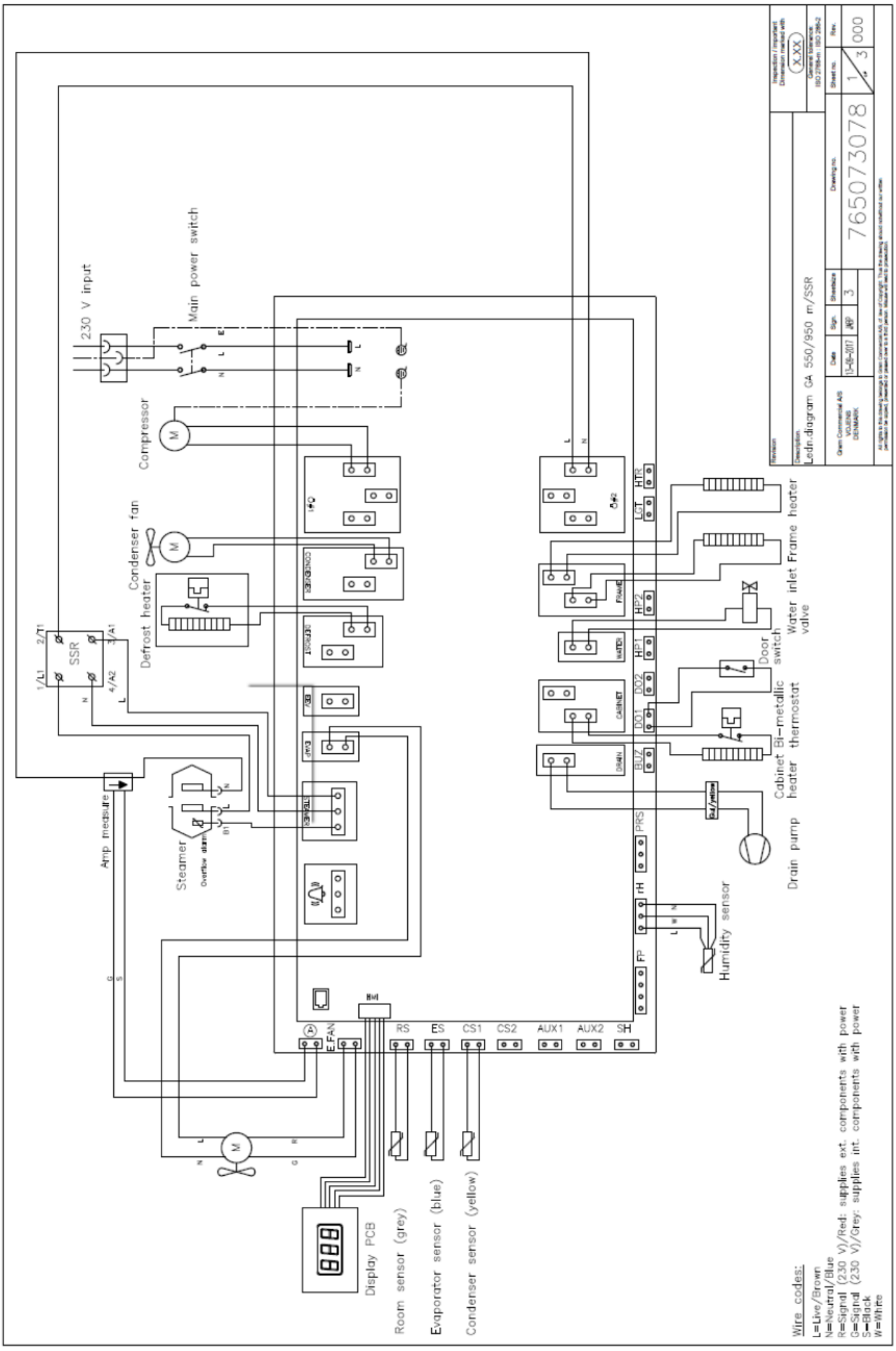

Piping diagram

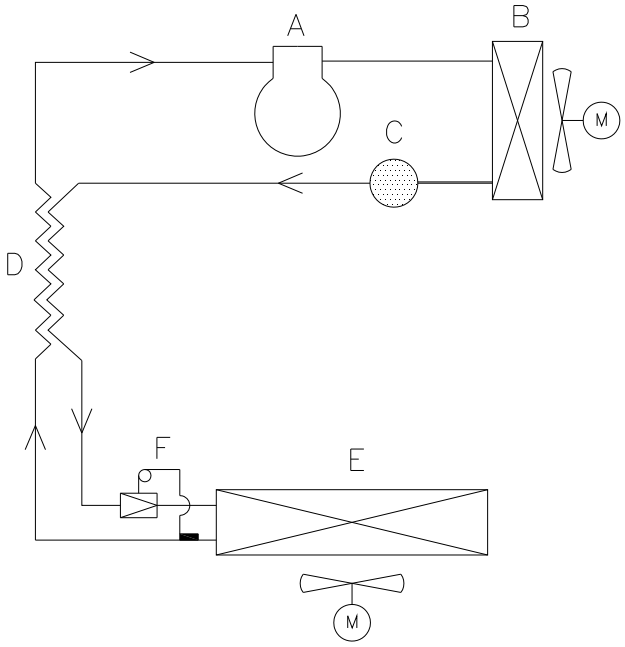

	DK	GB	D
A	Kompressor	Compressor	Kompressor
B	Kondensator	Condenser	Verflüssiger
C	Tørrefilter	Filter drier	Trockenfilter
D	Varmeudveksler	Heat exchanger	Wärmeaustauscher
E	Fordamper	Evaporator	Verdampfer
F	Ekspansionsventil	Expansion valve	Ekspansionsventil